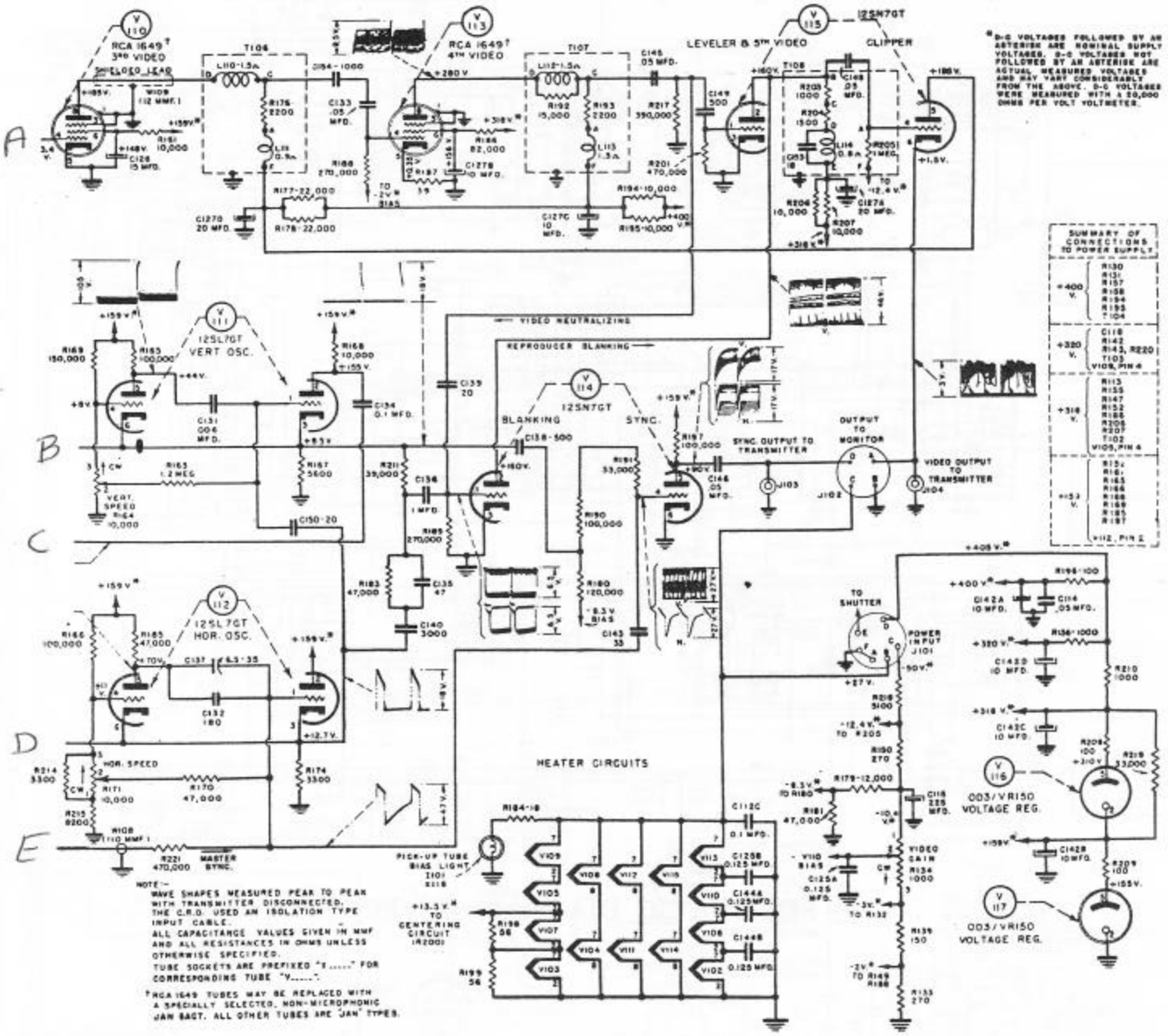

CRV-59AAE TELEVISION CAMERA